Student's Worksheet 1

Counting Leprechauns

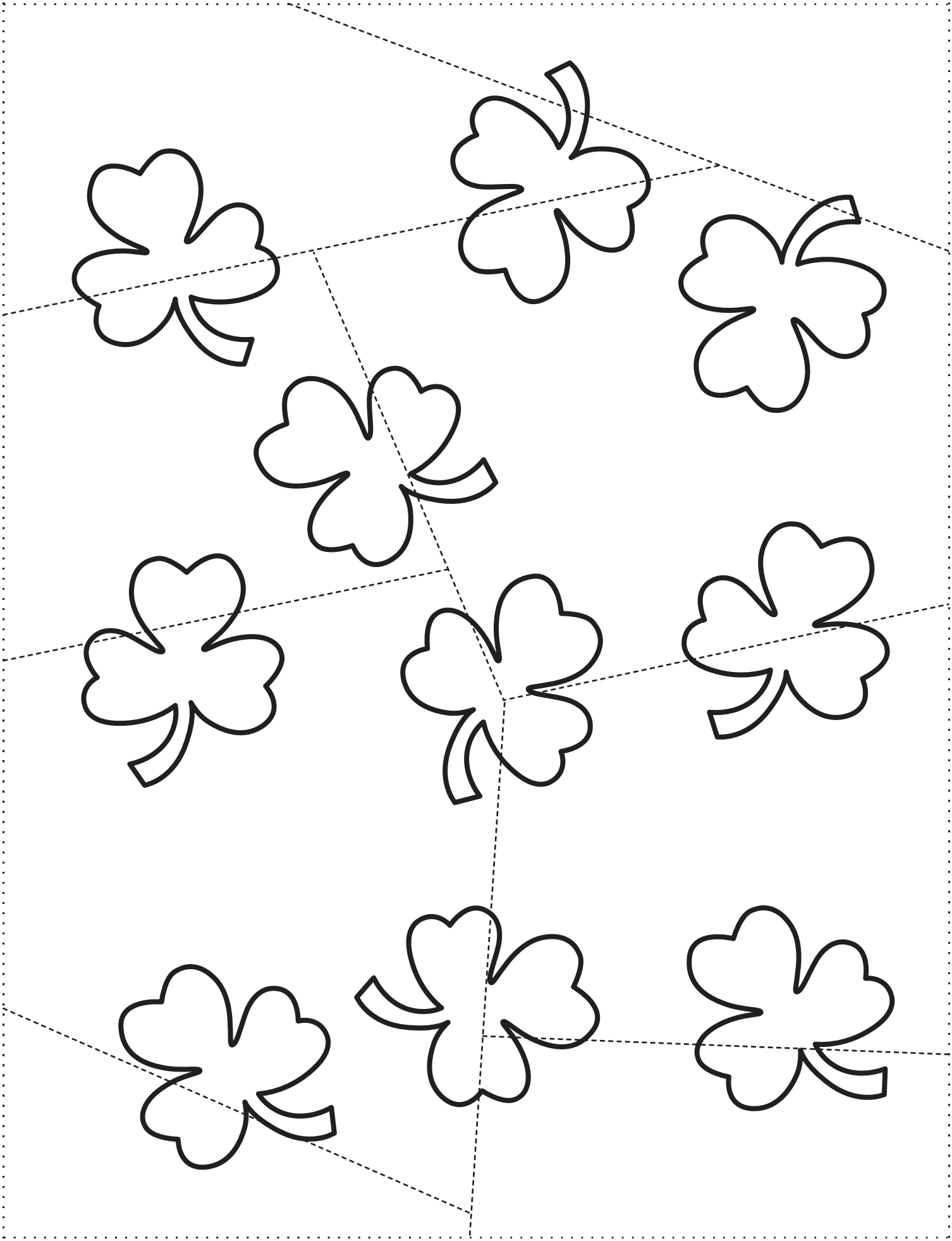

© Macmillan Polska 2010

PHOTOCOPIABLE

Student's Worksheet 2

Counting Leprechauns

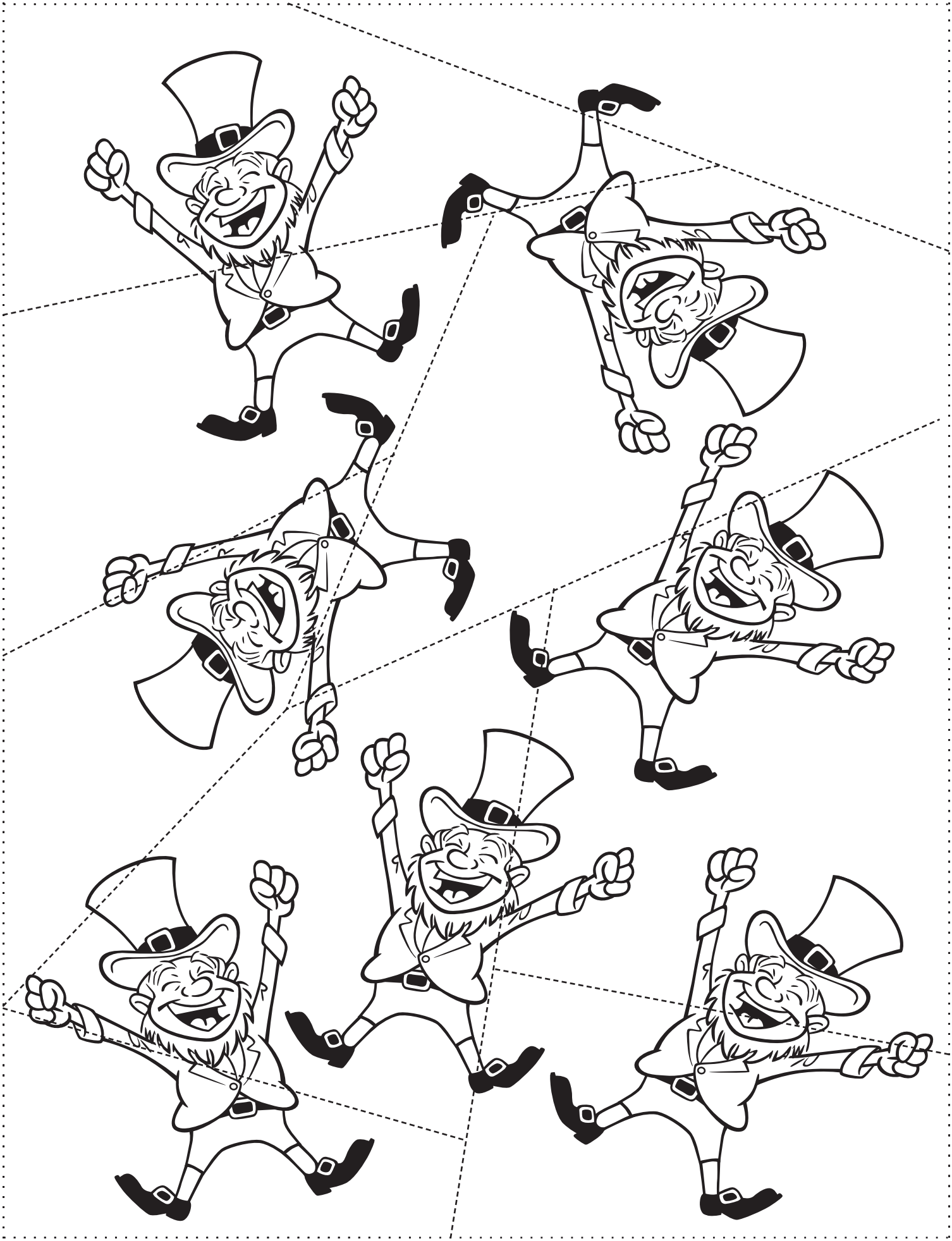

© Macmillan Polska 2010

PHOTOCOPIABLE

Student's Worksheet 3

Counting Leprechauns

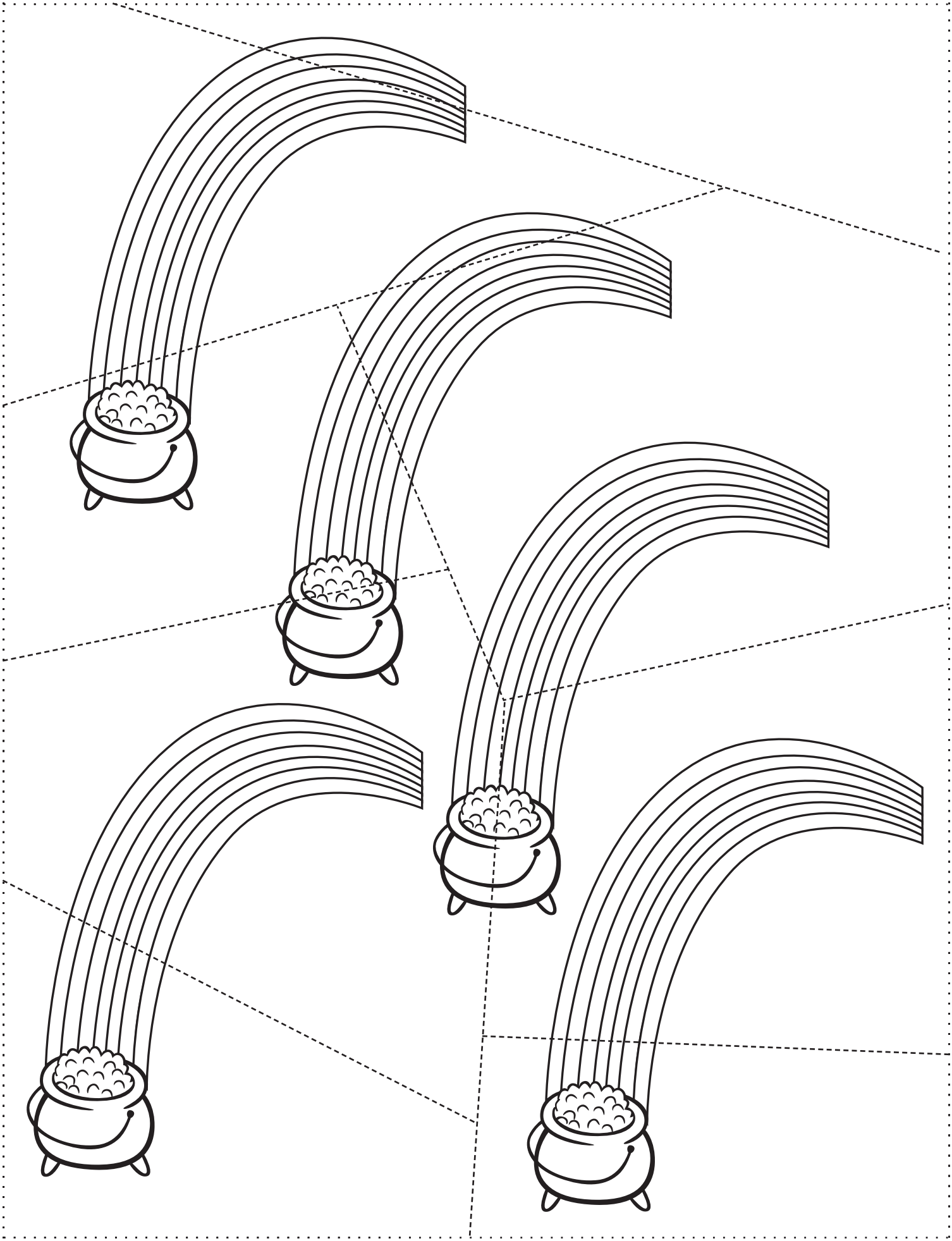

© Macmillan Polska 2010

PHOTOCOPIABLE